Incorporating

Fire dampers

NCA Series 100
Curtain blade fire dampers

- **CE marked curtain type fire damper**
- **Assessed against the requirements of BS EN 15650**
- **Four installation methods all with 120 minute 'E' ratings**
- **Galvanised steel construction as standard, G430 stainless steel optional**
- **Vertical installations for masonry walls and drywall partitions**
- **Horizontal installation for concrete floor slabs**
- **Available to suit square, rectangular, circular and flat oval ducting**

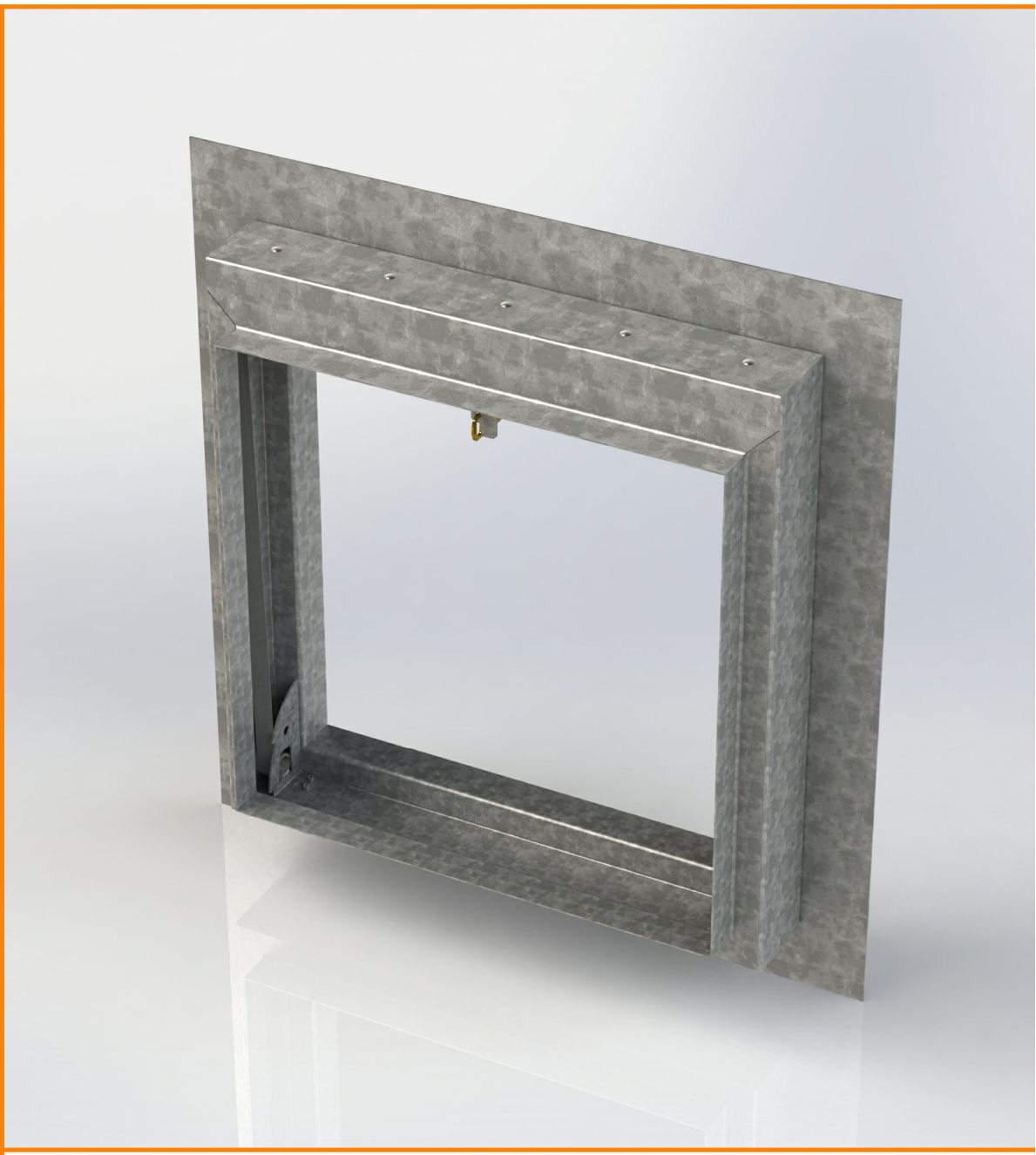

S100: September 2023

NCA Series 100 fire dampers

A CE marked fire damper, comprising a folding curtain type blade design.

Constructed from galvanised steel as standard, with grade 430 stainless steel optional, and available with 120 minute 'E' rated installations to suit masonry walls, drywall partitions and concrete floors.

During normal conditions, the curtain type blade pack is recessed into the damper header and retained in place by a fusible link, leaving the duct open to airflow.

Upon exposure to temperatures exceeding 72°C the fusible link will split, and the blade pack will be fully extended by springs to shut down the duct.

Series 100 fire dampers are designed to be used as part of building compartmentalisation, this being the process of constructing a building with zones. The purpose of this is that if a fire starts in any one zone, it is contained within that zone and not allowed to spread, thereby potentially savings lives, limiting damage to the building and making the job of fire fighters easier.

It is useful to think of fire dampers as the ductwork equivalent of fire doors, allowing an unrestricted flow of air during normal operation, but shutting down a potential transmission route in the event of fire.

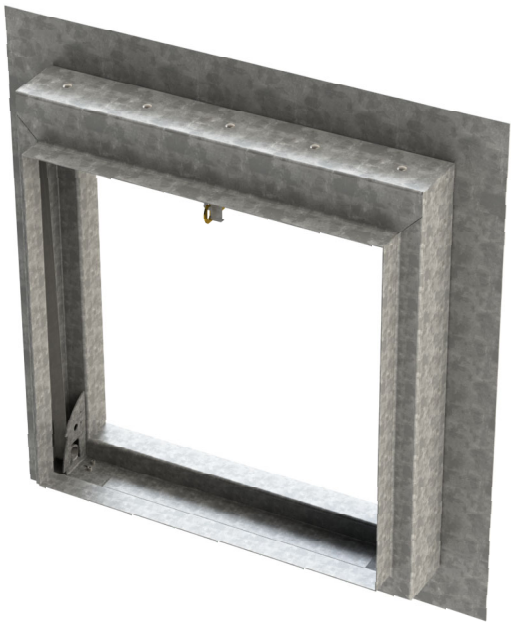

Design features

Material	Standard:	Galvanised steel case and blades Brass fusible link
	Optional:	Grade 430 stainless steel blades and / or case
Sizes	Minimum:	100mm x 100mm / 100mm diameter nominal
	Maximum:	Damper in HEVAC frame - 1250mm x 1000mm / 1000mm diameter nominal Damper in plate frame - 1000mm x 1000mm / 1000mm diameter nominal
	Units above the maximum size can be made in multiple sections. Please contact us for more information.	
Finish	Bare metal	
Mass/m² face area	20kg (S100BGH - 1000mm x 1000mm nominal size) 25kg (S100CGH - 1000mm diameter nominal size) Smaller units will be proportionally heavier relative to size	

Quality assurance

HVC Supplies (Stourbridge) Ltd is an ISO 9001 certified company.

Assessed to ISO 9001
Cert/Ref No. 1186

Damper design

1. **Installation frame**
   Designed to integrate the damper into the partition. Available as a HEVAC (shown) or plate frame.

2. **Link bracket**
   Retains the fusible link.

3. **Fusible link**
   Retains the blade pack in a recessed position under normal conditions. Splits into two parts to release blades upon reaching 72°C.

4. **Blade pack**
   Interlocking steel blades which concertina into the header during normal operation. When the fusible link splits the blade pack is pulled closed by the blade springs.

5. **Case**
   The main body of the damper, comprising elements including the header and spigots.

6. **Lock guide**
   Two fitted to each damper, act to retain the blade springs, and also lock the blade pack in position when closed.

7. **Blade spring**
   Fully extended during normal operation. When the fusible link splits, the blade springs pull the blade pack down and into the lock guides.

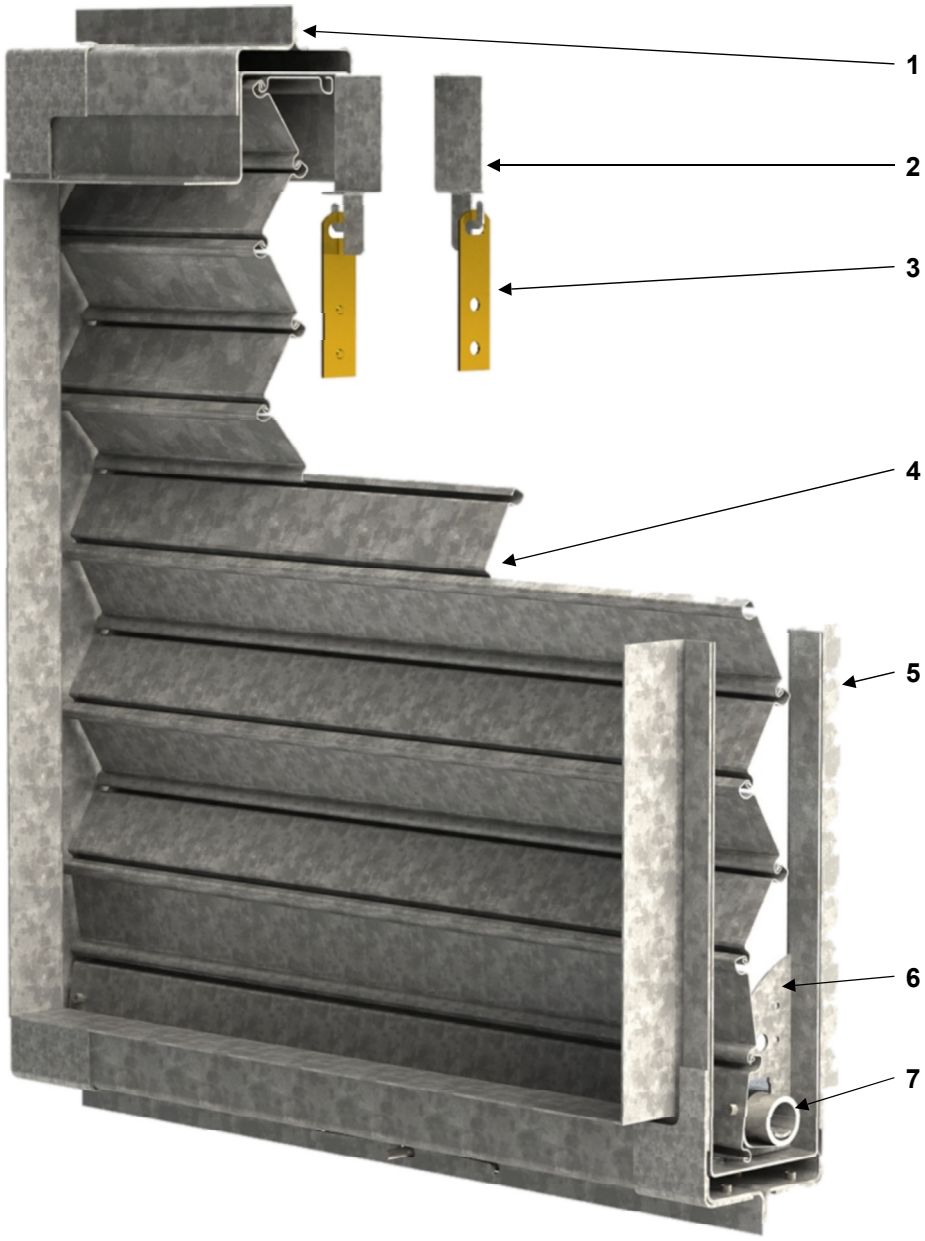

Product testing - Non-CE mandated

Case leakage

Series 100 fire dampers have been tested to:

- **BS EN 1751:1999**
  Ventilation for buildings - Air terminal devices
- **DW144**
  Specification for sheet metal ductwork

All case types available with Series 100 fire dampers have been tested, and the class/classes to which each has passed are detailed in the table below.

	Quadrilateral spigot S100A and S100B		Circular spigot S100C		Flat oval spigot S100D	
Static pressure differential (Pa)	**DW144**	**BS EN 1751**	**DW144**	**BS EN 1751**	**DW144**	**BS EN 1751**
100	A & B	A, B & C	A & B	A & B	A & B	A & B
200	A & B	A, B & C	A & B	A & B	A	A
300	A & B	A, B & C	A & B	A & B	A	A
400	A & B	A, B & C	A & B	A & B	A	A
500	A & B	A, B & C	A & B	A & B	A	A
600	B & C	A, B & C	B	A & B	Max leakage exceeded	A
700	B & C	A, B & C	B	A & B	Max leakage exceeded	A
800	B & C	A, B & C	B	A & B	Max leakage exceeded	A
900	B & C	A, B & C	B	A & B	B	A & B
1000	B	A & B	B	A & B	Max leakage exceeded	A
1100	Max leakage exceeded	A, B & C	Max leakage exceeded	A & B	Max leakage exceeded	B
1200	C	A, B & C	Max leakage exceeded	A & B	Max leakage exceeded	B
1300	C	A, B & C	Max leakage exceeded	A & B	Max leakage exceeded	B
1400	C	A, B & C	Max leakage exceeded	A & B	Max leakage exceeded	B
1500	C	A, B & C	Max leakage exceeded	A & B	Max leakage exceeded	B
1600	C	A, B & C	Max leakage exceeded	A & B	Max leakage exceeded	B
1700	C	A, B & C	Max leakage exceeded	A & B	Max leakage exceeded	B
1800	C	A, B & C	Max leakage exceeded	A & B	Max leakage exceeded	B
1900	C	A, B & C	Max leakage exceeded	A & B	Max leakage exceeded	B
2000	C	A, B & C	Max leakage exceeded	A & B	Max leakage exceeded	B

Product testing - Non-CE mandated

Corrosion

Series 100 fire dampers have been tested to:

BS EN 60068-2-11:1999
Salt spray corrosion test
Pass

Installation guide

HVC currently have four CE marked installations available for Series 100 fire dampers.

Please see the table below to find the installation type you require.

Installation code	Frame type	Substrate			Nominal size range (w x h, mm)		Classification (EN 13501-3)
		Flexible wall	Rigid wall	Concrete floor	Maximum (single section)	Maximum (multiple section)	
S100-1V (formerly FD-1V)	HEVAC		✓ Min. thickness 150mm Min. density 650kg/m³		1250 x 1000	Unlimited†	E 120 (ve i↔o)
S100-2VP (formerly FD-2VP)	Plate	✓ Min. spec EI120 group A*			1000 x 1000	Unlimited†	E 120 (ve i↔o)
S100-2VM (formerly FD-2VM)	Plate		✓ Min. thickness 130mm		1000 x 1000	Unlimited†	E 120 (ve i↔o)
S100-2HC (formerly FD-2HC)	Plate			✓ Min. thickness 150mm Min. density 600kg/m³	1000 x 1000	Not available	E 120 (ho i↔o)

* As per EN 1363-1:2020

† Multiple assemblies larger than 2 x 2 arrays are permitted provided they are structurally supported to a fire-safe design provided by competent structural engineers.

Installation S100-1V

NCA Series 100 fire damper c/w HEVAC frame in rigid wall

Installation classified to (in accordance with BS EN 13501-3):

E 120 (ve i↔o)

120 minute rated vertical installation
Air permitted to flow in either direction through damper
Permitted for single and multiple section assemblies

Installation procedure:

Position the damper centrally within a correctly sized aperture, constructed in accordance with our S100 c/w HEVAC frame installation instructions.

Bend out the frame tabs and set them into recesses pre-cut into the aperture perimeter.

Fill space between damper installation frame and inside of aperture with mortar.

Damper must be installed so blades fall downwards when released.

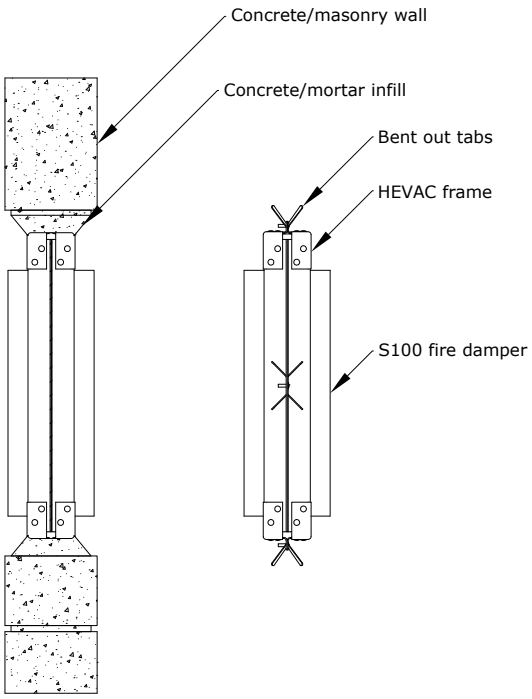

Installation S100-2VP

NCA Series 100 fire damper c/w plate frame in flexible wall

Installation classified to (in accordance with BS EN 13501-3):

E 120 (ve i↔o)

120 minute rated vertical installation
Air permitted to flow in either direction through damper
Permitted for single and multiple section assemblies

Installation procedure:

Position the damper body centrally within a correctly sized aperture, constructed in accordance with our S100 c/w plate frame installation instructions.

Drill 5mm diameter holes through the plate frame, 10mm in from the edge and on a pitch of not more than 125mm and screw the damper to the wall ensuring all screws gain a positive fix on the steel framework inside the partition.

Mineral wool infill in the wall cavity is not mandatory.

No backfilling, sealing or pattress frame is required.

Damper must be installed so blades fall downwards when released.

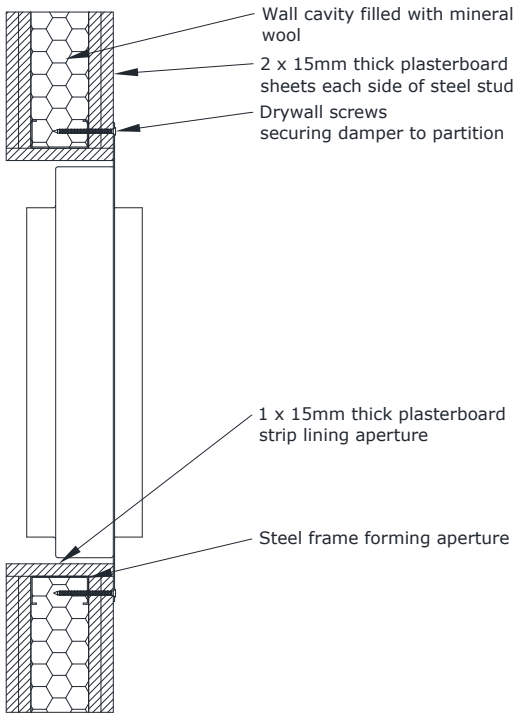

The above are shortened versions of our full installation method and do not contain all details necessary to perform a compliant installation.

To download full installation instructions go to:

www.h-v-c.com/installations

Installation S100-2VM

NCA Series 100 fire damper c/w plate frame in masonry wall

Installation classified to (in accordance with BS EN 13501-3):

E 120 (ve i↔o)

120 minute rated vertical installation
Air permitted to flow in either direction through damper
Permitted for single and multiple section assemblies

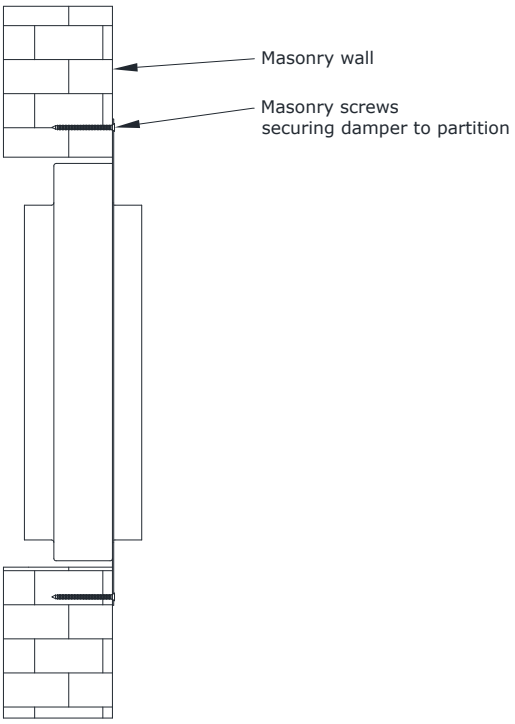

Installation procedure:

Position the damper body centrally within a correctly sized aperture, constructed in accordance with our S100 c/w plate frame installation instructions.

Drill 8mm diameter holes through the plate frame, 10mm in from the edge and on a pitch of not more than 125mm and screw the damper to the wall ensuring all screws gain a positive fix on the concrete/masony.

No backfilling, sealing or pattress frame is required.

Damper must be installed so blades fall downwards when released.

Installation S100-2HC

NCA Series 100 fire damper c/w plate frame in aerated concrete floor slab

Installation classified to (in accordance with BS EN 13501-3):

E 120 (ho i↔o)

120 minute rated horizontal installation
Air permitted to flow in either direction through damper
Permitted for single section assemblies only

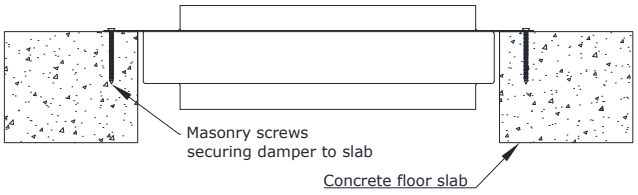

Installation procedure:

Position the damper body centrally within a correctly sized aperture, constructed in accordance with our S100 c/w plate frame installation instructions.

Drill 8mm diameter holes through the plate frame, 10mm in from the edge and on a pitch of not more than 125mm and screw the damper to the floor ensuring all screws gain a positive fix on the concrete.

No backfilling, sealing or pattress frame is required.

The above are shortened versions of our full installation method and do not contain all details necessary to perform a compliant installation.

To download full installation instructions go to:

www.h-v-c.com/installations

Technical drawings - HEVAC frame

S100A*H

- Square spigot
- Blades in airstream
- Spigot 6mm under nominal (duct) width and height
- Recommended for sizes under 200mm high
- Min size: 100mm W x 100mm H
- Max size: 1250mm W x 1000mm H

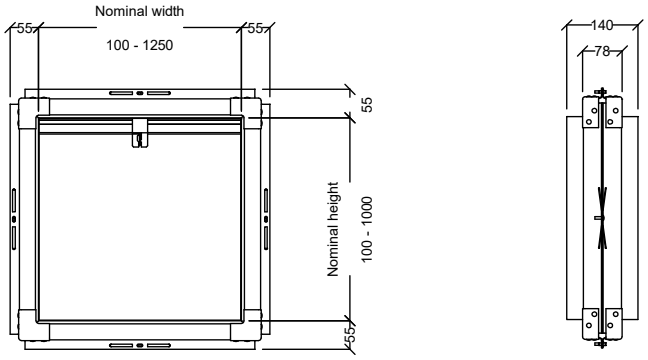

S100B*H

- Square spigot
- Blades out of airstream
- Spigot 6mm under nominal (duct) width and height
- Recommended for sizes equal to or over 200mm high
- Min size: 100mm W x 200mm H
- Max size: 1250mm W x 1000mm H

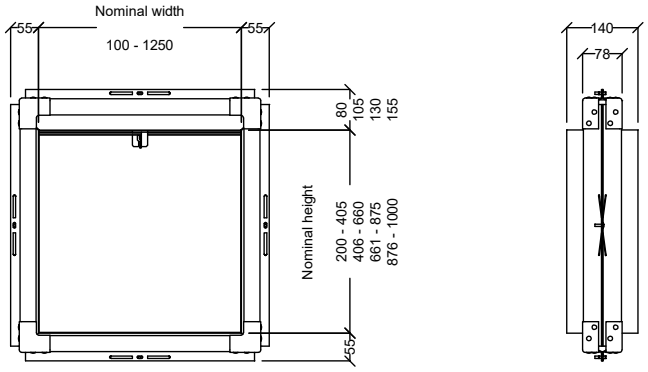

S100C*H

- Circular spigot
- Blades out of airstream
- Spigot 3mm under nominal (duct) diameter
- Min size: 100mm dia
- Max size: 1000mm dia

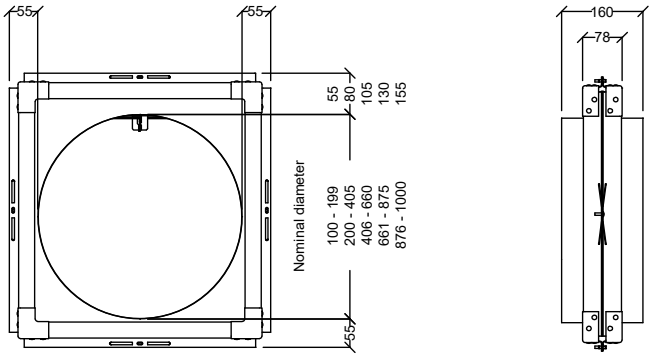

S100D*H

- Flat oval spigot
- Blades out of airstream
- Spigot 3mm under nominal (duct) width and height
- Min size: 150mm W x 100mm H
- Max size: 1250mm W x 1000mm H

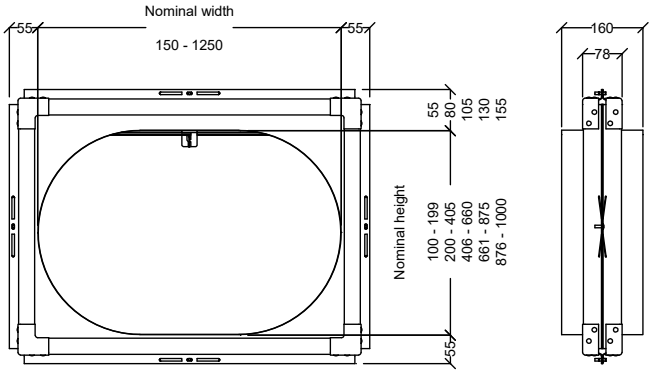

Please note:

Units above the maximum size can be made in multiple sections. Please contact us for more information.

Technical drawings - Plate frame

S100A*P

- Square spigot
- Blades in airstream
- Spigot 6mm under nominal (duct) width and height
- Recommended for sizes under 200mm high
- Min size: 100mm W x 100mm H
- Max size: 1000mm W x 1000mm H

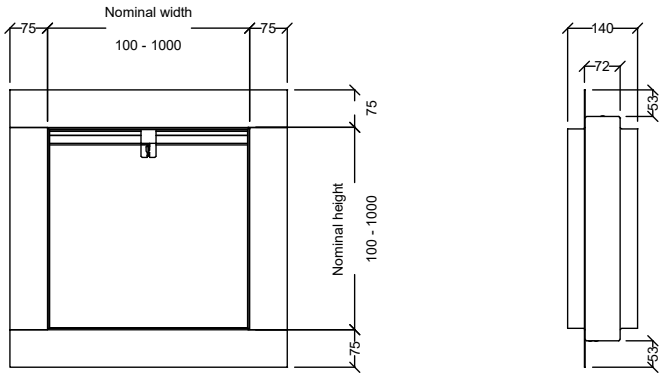

S100B*P

- Square spigot
- Blades out of airstream
- Spigot 6mm under nominal (duct) width and height
- Recommended for sizes equal to or over 200mm high
- Min size: 100mm W x 200mm H
- Max size: 1000mm W x 1000mm H

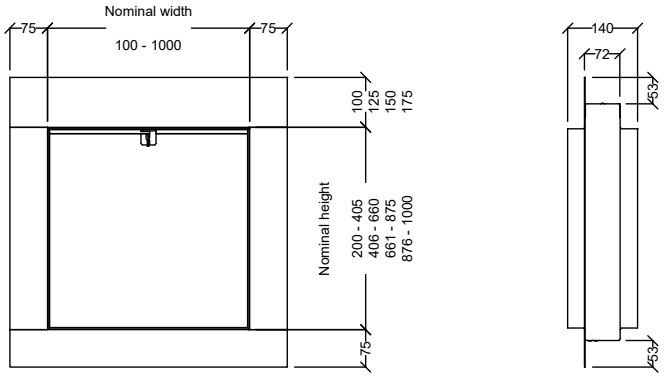

S100C*P

- Circular spigot
- Blades out of airstream
- Spigot 3mm under nominal (duct) diameter
- Min size: 100mm dia
- Max size: 1000mm dia

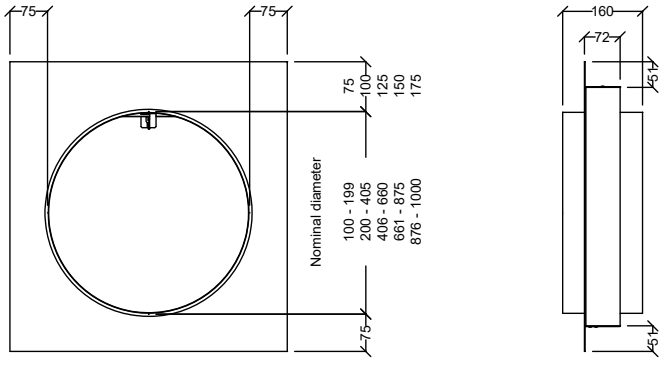

S100D*P

- Flat oval spigot
- Blades out of airstream
- Spigot 3mm under nominal (duct) width and height
- Min size: 150mm W x 100mm H
- Max size: 1000mm W x 1000mm H

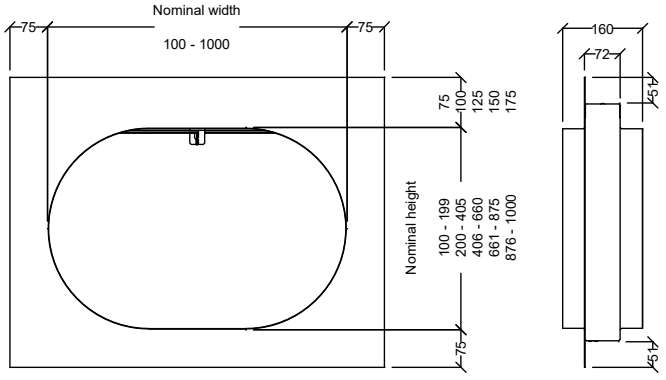

Please note:

Units above the maximum size can be made in multiple sections. Please contact us for more information.

Installation accessories

Fixing lugs

Now available factory fitted to fire dampers equipped with plate frames, fixing lugs allow dampers to be hung from drop rods.

Factory drilled with an 11mm diameter hole to suit up to an M10 drop rod, fixing lugs aid installation by supporting the damper during fitment.

Nuts and washers should only be positioned below the fixing lugs, allowing the damper/drop rod to expand in the event of fire.

Please note: The addition of lugs does not alter the need to install dampers as per our published installation guide.

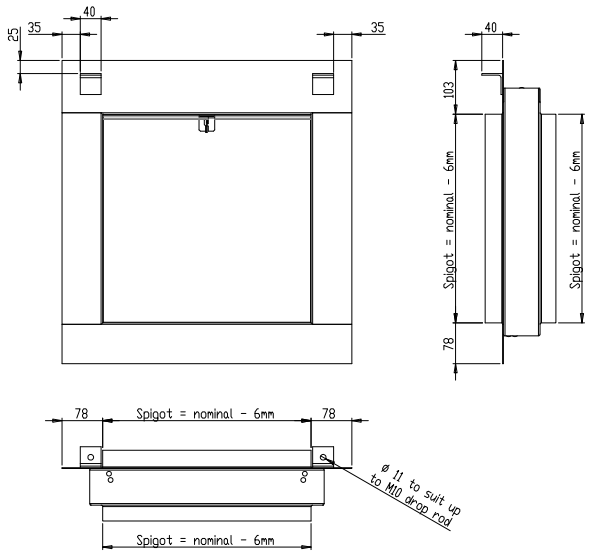

Damper operation methods

Fusible links (standard operation method)

The standard operation method, fusible links are a two part brass unit, joined with a solder formulated to melt at 72°C

Series 100 fusible links incorporate two dimples which act to prevent creep over time. This ensures that the damper only releases when the solder has melted, rather than through fatigue due to the constant pressure exerted by the blade pack.

Electromagnets

Power normally on, damper closes upon loss.

Available for systems which require dampers to close upon loss of power.

The fusible link is retained so the damper will still close upon reaching the specified temperature.

Please note that unless back up power supplies are in place, a power cut will result in dampers closing.

Not available on square/rectangular/flat oval dampers with a nominal height of less than 200mm, or on circular dampers with a nominal diameter of less than 250mm.

Available models: 24V DC
24V AC (with rectifier)
230V DC
230V AC (with rectifier)

Maintenance assisting options

Resettable link / Easy maintenance link

Resettable links make damper testing and maintenance easier by reducing the complexity of releasing and resetting a damper. Normally the link must be manually removed from the bracket which can be awkward, especially through small duct access doors.

Resettable links incorporate a spring loaded lever arm which holds one end of the fusible link. To release the damper during testing depress the lever arm to release the blade pack.

Resetting the pack then involves pushing the blades back into the header, and putting the link back into position.

Pull ring

Attached to the bottom blade, when working from upstream of the damper pull rings allow the blade pack to be pulled off the lock guides and reset into the damper header.

Damper status indicators

Microswitch

Made by Honeywell specifically for HVC, this double pole, single throw microswitch completes a circuit when the blade pack falls, remotely indicating blade position.

A spring arm protrudes from the microswitch into the blade path. Upon blade closure, the arm is pushed down. The arm is spring-loaded so no resetting to the switch itself is required.

The microswitch body allows connection on the back or either side to assist fitting.

Not available on square/rectangular/flat oval dampers with a nominal height of less than 100mm, or on circular dampers with a nominal diameter of less than 200mm.

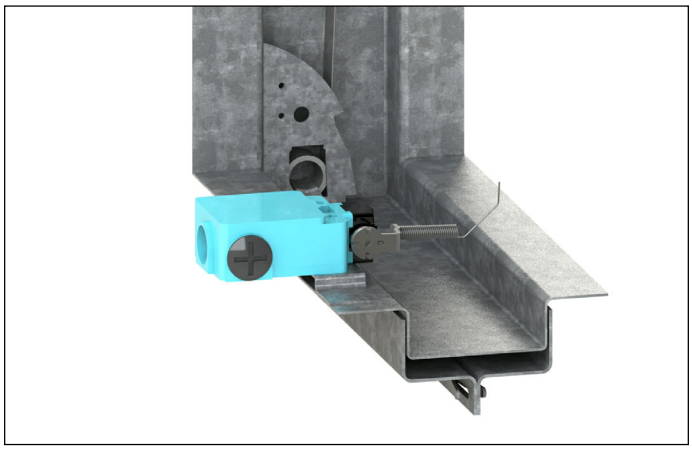

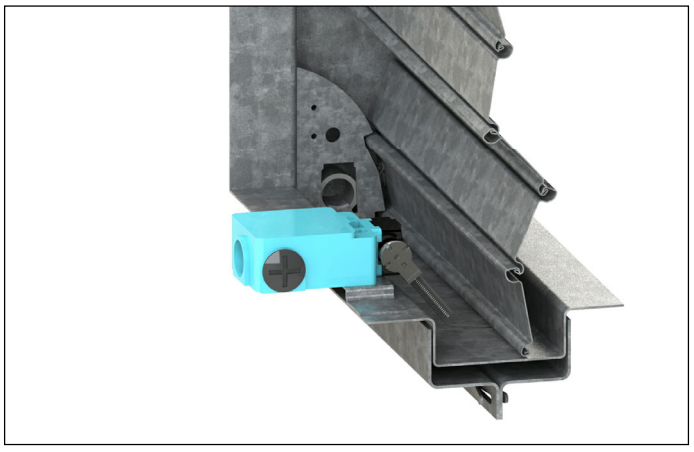

Visual position indicator

VPIs allow damper blade position to be observed from outside the duct.

Positioned on the bottom of the damper frame, VPIs consist of a clear tube with a red insert.

When the damper is open, the red insert is fully recessed. When closed, the insert is extended.

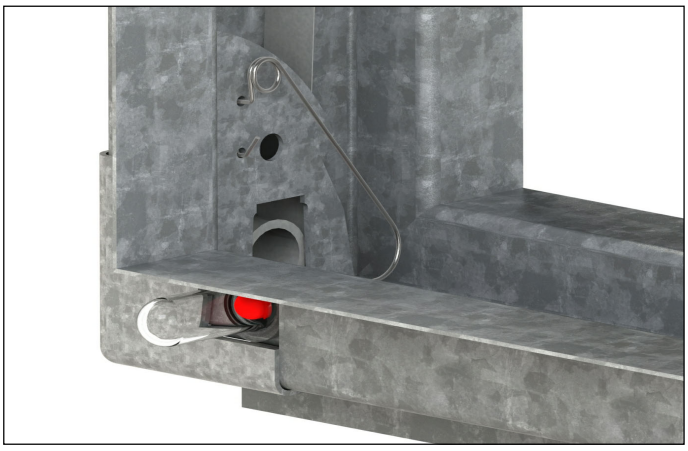

Further information: Direct field of application

Separation between fire dampers and between fire dampers and construction elements

- There should be a minimum of 200mm of supporting construction between fire dampers installed in separate ducts.
- There should be a minimum of 75mm of supporting construction between the fire damper and any adjacent construction element, e.g. a wall or ceiling.

Supporting construction

A test result obtained for a fire damper mounted in or on the face of a standard supporting construction is applicable to a supporting construction of the same type with a fire resistance equal to or greater than that of the standard supporting construction used in the test (thicker, denser, more layers of board etc.)

Installation

Installation should take into account the requirements of future maintenance, with a view to providing adequate access to fire dampers for testing and cleaning purposes.

We are able to supply a full range of access doors to facilitate access into ductwork.

Important note:

Installation into chlorinated environments

We are unable to supply S100 fire dampers suitable for installation into chlorinated environments, swimming baths for example.

Any dampers installed into environments where chlorine is present shall be considered to be installed in an unsuitable location and will therefore not be covered by our standard 12 month warranty.

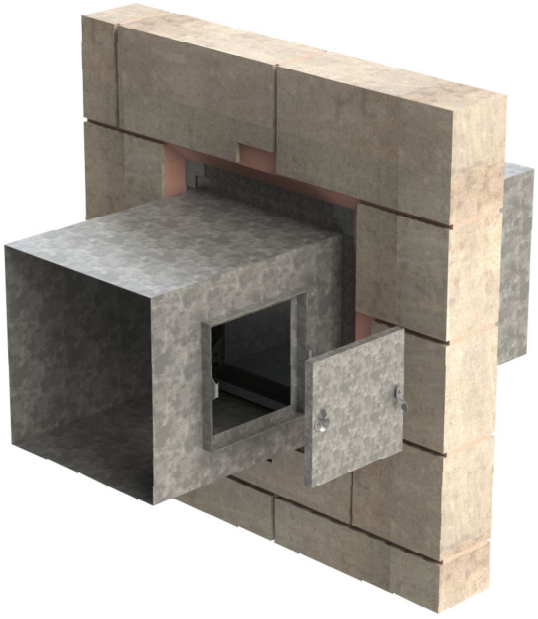

Maintenance

Maintenance of fire dampers is essential to ensure they remain in good working condition for the life of the building.

Testing and maintenance must be carried out in accordance with:

BS 9999
Code of practice for fire safety in the design, management and use of buildings.

An operation and maintenance manual (O & M) for NCA Series 100 CE marked fire dampers is available via:

www.h-v-c.com

Finish

Bare metal only

Ordering codes

Example

1	**-**	**500 x 500**	**-**	**S100BGP**

Codes

1)	**Quantity**		
2)	**Size (mm)**	(Width x height)	Nominal size
3)	**Series**	S100	Series 100 curtain blade fire damper
4)	**Spigot shapes:**	A	Square spigotted (recommended under 200mm nominal height)
		B	Square spigotted (recommended over or equal to 200mm nominal height)
		C	Circular spigotted
		D	Flat oval spigotted
	Material:	G	Fully galvanised steel
		M	Galvanised steel case, grade 430 stainless steel blades
		S	Fully grade 430 stainless steel
	Frame type:	H	HEVAC frame
		P	Plate frame
5)	**Fixing lugs**	FL	Factory fitted fixing lugs (plate frame only)
6)	**Accessories:**	VPI	Visual position indicator
		MS	Microswitch (minimum height/dia. restictions apply - please see page 11)
		PR	Pull ring
		RSL	Resettable link
		EM24AC	Electromagnet 24V AC (minimum height/dia. restictions apply - please see page 10)
		EM24DC	Electromagnet 24V DC ((minimum height/dia. restictions apply - please see page 10)
		EM230AC	Electromagnet 230V AC (minimum height/dia. restictions apply - please see page 10)
		EM230DC	Electromagnet 230V DC (minimum height/dia. restictions apply - please see page 10)

Please note: HEVAC frames are supplied in galvanised steel only, regardless of material choice in the product code.

HVC & NCA products

HVC offer the significant advantage of manufacturing both in duct and duct terminal equipment, making us a one stop shop for all your HVAC needs.

The products shown below are a selection, not an exhaustive list. Go to **www.h-v-c.com** for details on all HVC and NCA products.

HVC: Grilles, Diffusers, Louvres and Volume Control Dampers

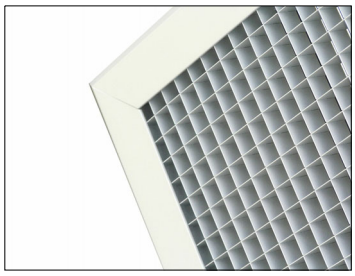
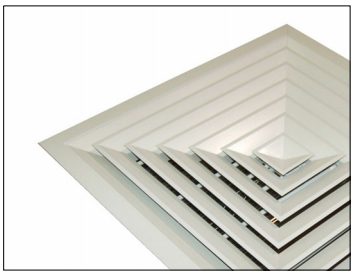
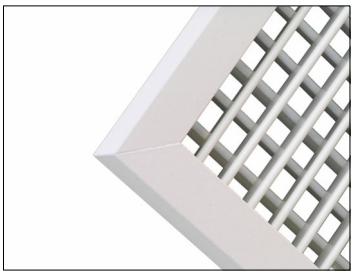

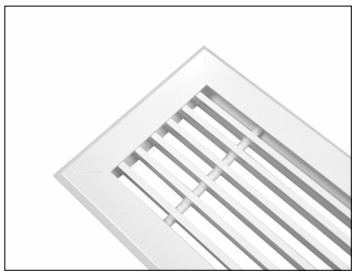
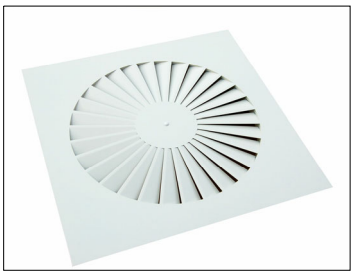
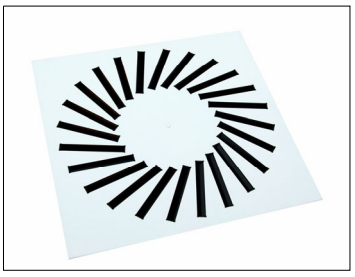

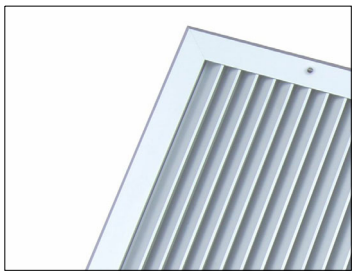

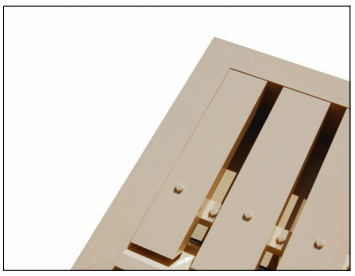
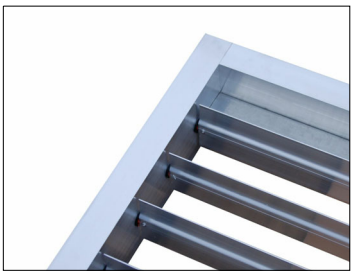

NCA: Fire and Volume Control Dampers



Assessed to ISO 9001
Cert/Ref No. 1186

HVC Supplies (Stourbridge) Ltd
Jason House
Amblecote
West Midlands
DY8 4EY
United Kingdom

Tel: +44 (0)1384 376555
Fax: +44 (0)1384 392555

sales@h-v-c.com

www.h-v-c.com